40° SKEW VARIABLE BRIDGE WIDTH 2:1 FILL SLOPES WINGS PARALLEL TO ROADWAY

ABUTMENT SKEW CORRECTION FACTOR (SCF) = 1.305

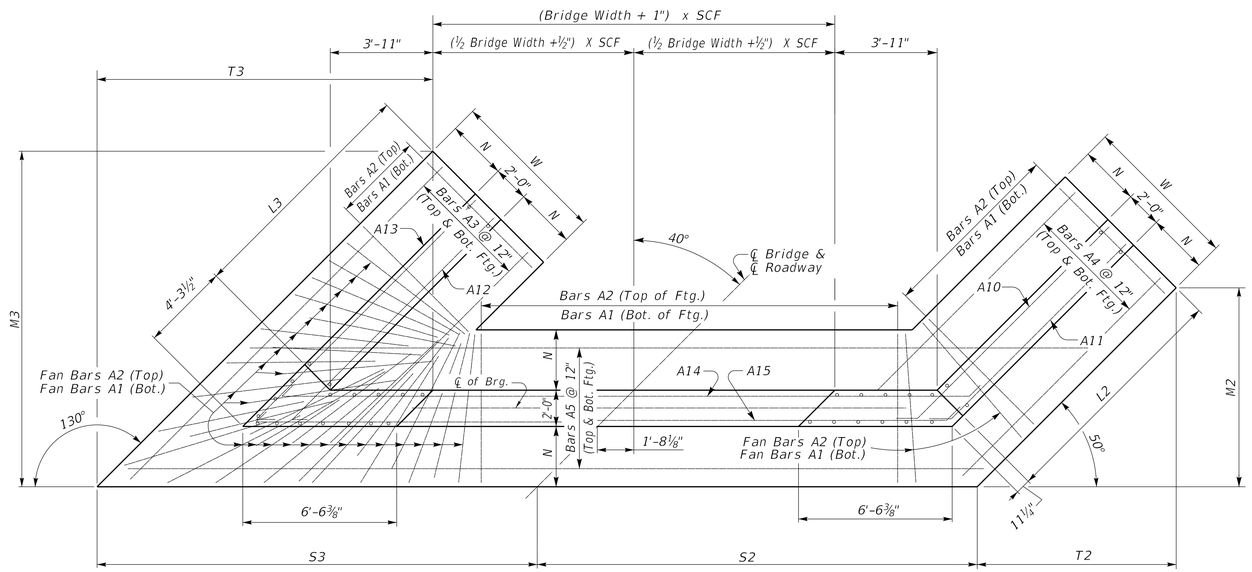

(Left Skew as shown;right skew opp. hand)

PLAN

NOTE: Trim A16 & A17 bars if necessary
Trim A3 bars as necessary

For fanning A1 & A2 bars with an acute angle, space @ 12" at face of toe, then as you get closer to the corner start pulling every other bar back toward the heel. (Similar to as shown)

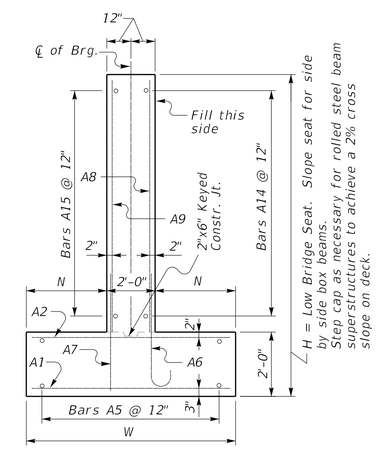

WALL SECTION

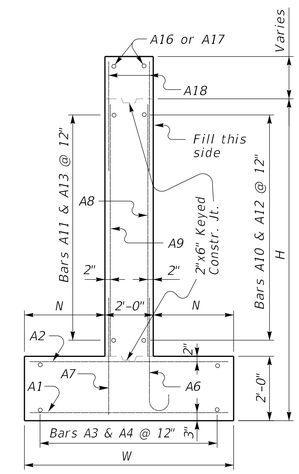

WING SECTION

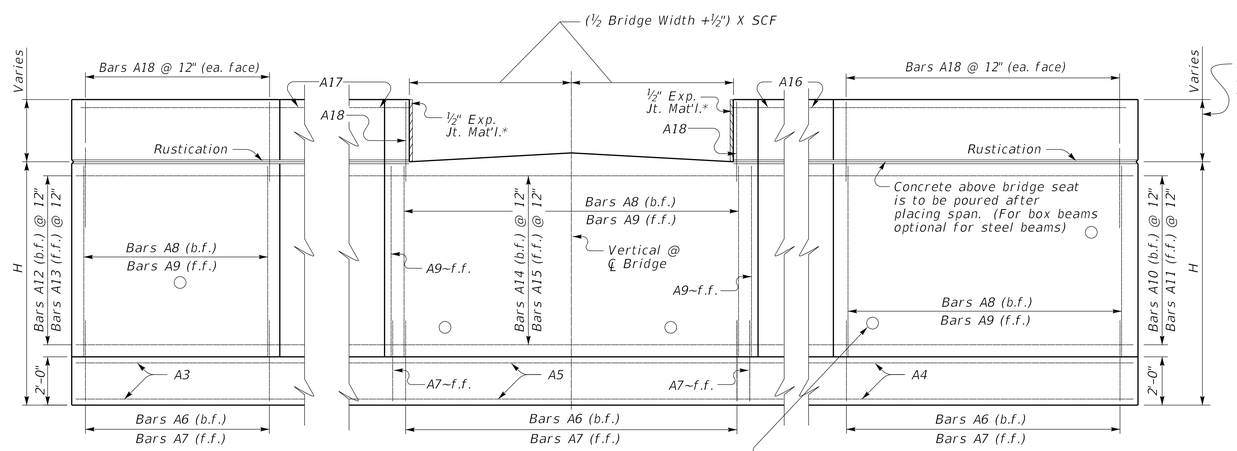

ELEVATION

Depth of int. beam, bearing pad, haunch, and slab when req.

Concrete above bridge seat is to be poured after placing span. (For box beams optional for steel beams)

Place 4" weep hole drains at 8'-0" centers at such elevation as to afford best drainage of backfill, in accordance with the Standard Specifications.

*Expansion Joint Material:
AASHTO M153
Type-I Sponge Rubber

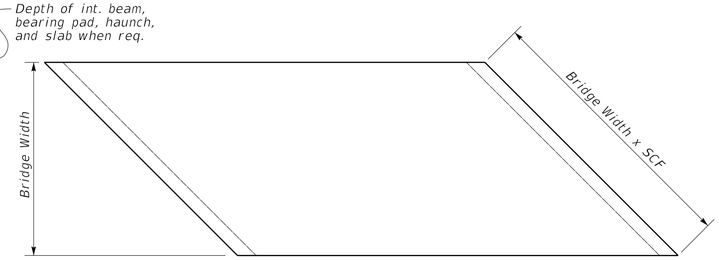

PLAN OF SUPERSTRUCTURE SLAB

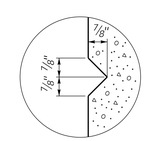

RUSTICATION GROOVE

REVISION DATE: 08/11/2025
REVISION NUMBER: 0

SUBMITTED Michael Cox 08-11-2025
DIVISION DIRECTOR DATE

APPROVED Jason Ballinger 08-11-2025
STATE HIGHWAY ENGINEER DATE

BRIDGE STANDARDS

COMMONWEALTH OF KENTUCKY
DEPARTMENT OF HIGHWAYS

40° SKEW SUPPORT VARIABLE WIDTH ABUTMENT PARALLEL WINGS

STANDARD DRAWING NUMBER
BSA-057-01

OpenRoads Designer v23.00.01.11